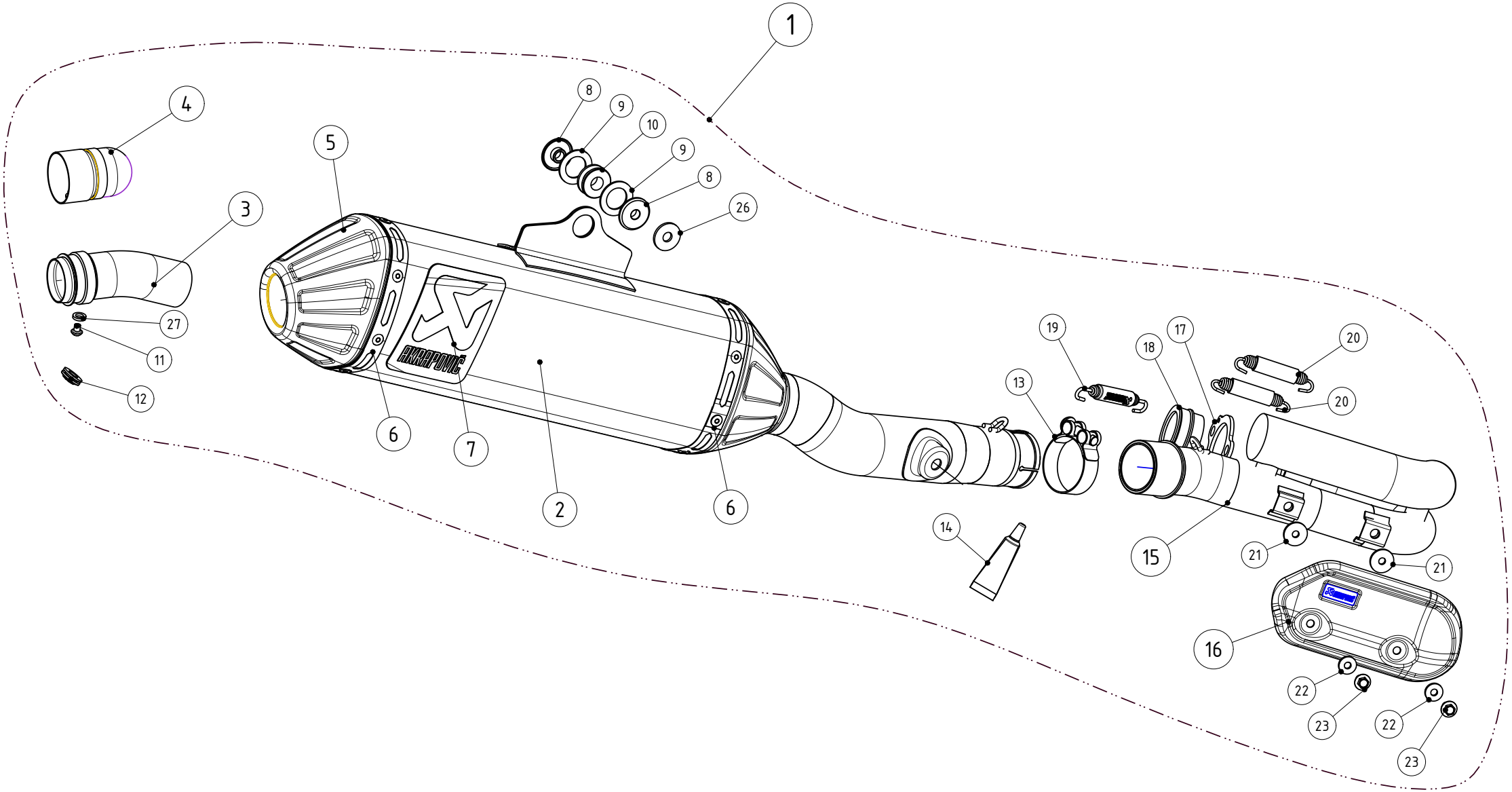

MUFFLER REPAIR KITS	
REPACK	24
SLEEVE	25

No.	SalesCode	Description	Qty.
1	S-K2MET8-BNTA	evolution system	1
2	M-BN00406T	muffler	1
3	V-TUV099/TI	insert TI	1
4	P-SA002	spark arrester SS	1
5	V-EC176	end cap TI	1
6	P-TT51	belt TI for TI sleeve	2
7	P-VST1AL	sticker	2
8	P-DR62	spacer bushe AL	2
9	P-DR63	washer TI	2
10	P-GUV013	rubber insert	1
11	P-FB56	bolt	1
12	P-GUV004	rubber insert	1
13	P-R21	clamp SS	1
14	P-HF113	copper paste	1
15	H-K2MET7	headet TI	1
16	P-HSK2M2	carbon heat shield	1
17	P-F12	flange SS	1
18	P-43	inner sleeve SS	1
19	P-S1	spring	1
20	P-S2	spring	2
21	P-DRH1/BAR316	heat resistant washer	2
22	P-DRH4/BAR316	heat resistant washer	2
23	P-FB150	bolt	2
24	P-RPCK82	muffler repack kit	1
25	P-RKS348BNT360	muffler sleeve kit	1
26	P-DR4	washer SS	1
27	P-DR18	washer SS	1